17016PP

MATERIAL: GRADE 8 PER SAE J429 OR EQUIVALENT.

HARDNESS: QUENCH AND TEMPER TO 33-39 HRC.

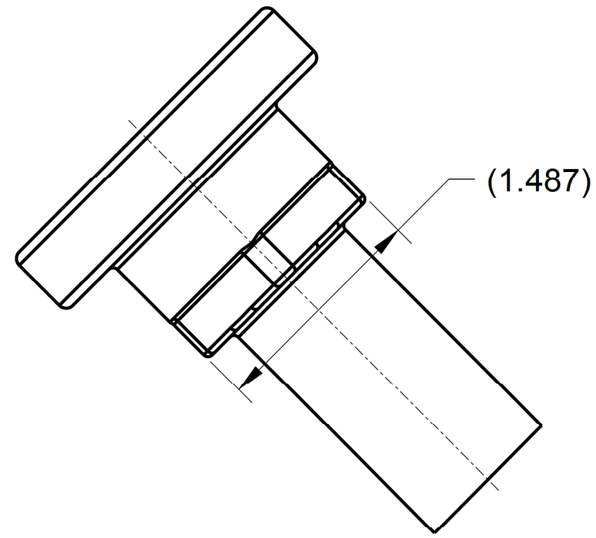

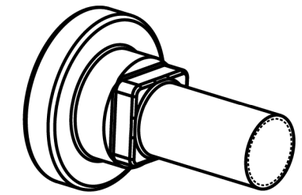

SCALE 1/2

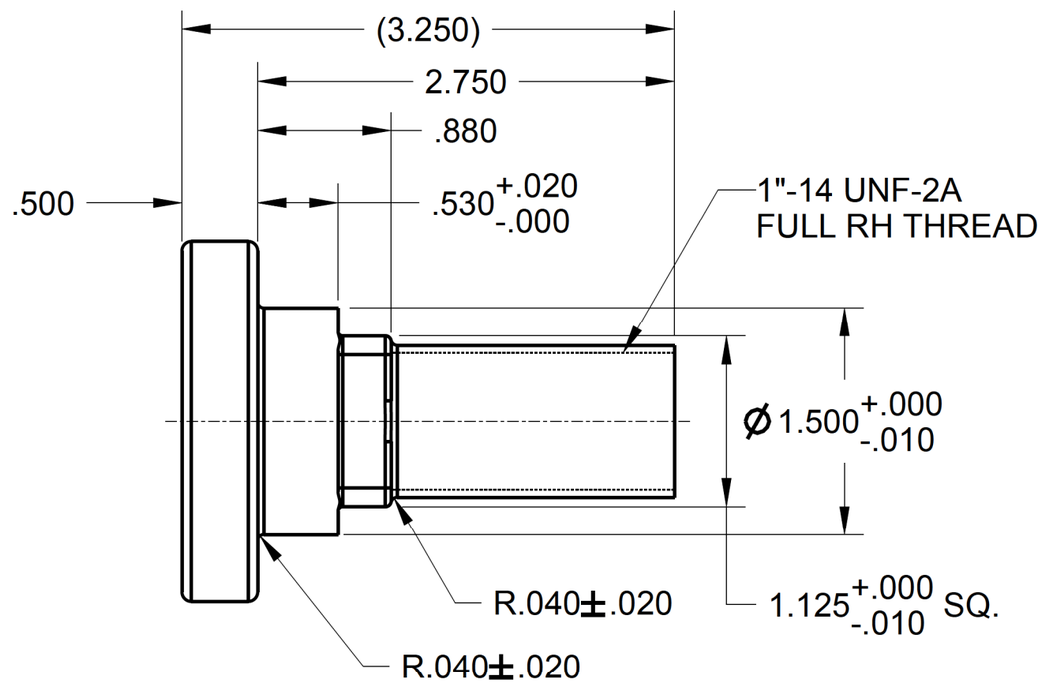

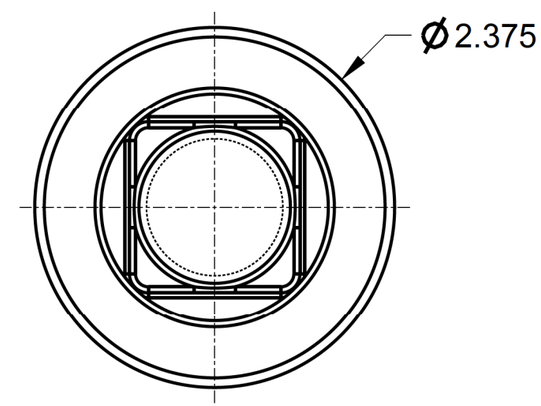

TOLERANCES unless specified	DRAWN BY SRW		
FRACTIONS ± 1/16 2-PLC. DEC ± .06 3-PLC. DEC ± .030 ANGLES ± 1°	CHECKED BY APPROVED BY DATE 06/04/25		
MATERIAL: SEE NOTE		TITLE: BRUSH CUTTER BLADE BOLT 2 3/4"	
SCALE: 1/1	WEIGHT: 1.4	SHEET 1 OF 1	B PART NO. 17016PP

NO.	DATE	REVISION	BY